Key Features

- 2 Megapixel high-performance CMOS
- HD output, up to 1080P resolution
- True Day/Night, Smart IR
- EXIR technology, up to 40m IR distance
- IP66 weatherproof
- OSD menu controlled function

Specification

Model / Parameter	ZKTR2043
	HD 1080p EXIR Dome Camera
Camera	
Image Sensor	1/2.7" Progressive Scan CMOS
Signal System	PAL/NTSC
Effective Pixels	1930(H)*1088(V)
Min. Illumination	0.1 Lux @ (F1.2,AGC ON),0 Lux with IR
Shutter Time	1/25(1/30) s to 1/50,000 s
Lens	3.6mm
	Angle of View: 90°(3.6mm)
Lens Mount	M12
Angle Adjustment	Pan: 0 - 360°, Tilt: 0 - 75°, Rotation: 0 - 360°
Day & Night	ICR
Synchronization	Internal synchronization
Video Frame Rate	1080p@25fps/1080p@30fps
HD Video Output	1 HD output
S/N Ratio	More than 52dB

Menu	
Camera ID	On/off (0-255)
AGC	Support
D/N Mode	Color/BW/Auto/EXT
White Balance	Auto/User/Push/8000K/6000K/4200K/3000K
Privacy Mask	On/Off, maximum 2 zones
Motion Detection	On/Off, maximum 4 zones
BLC	Support
Anti-flicker	On/Off
Language	English/Chinese
Functions	Digital noise reduction, Mirror
General	
Working Temperature/Humidity	-40 °C – 60 °C (-40 °F – 140 °F) Humidity 90% or less (non-condensing)
Power Supply	12V DC
Power Consumption	Max. 3W
Weather Proof Ratings	IP66
IR Range	Up to 40m
Dimension	Φ110 × 93.2 mm(Φ4.33” × 3.67”)
Weight	260 g (0.57 lb)
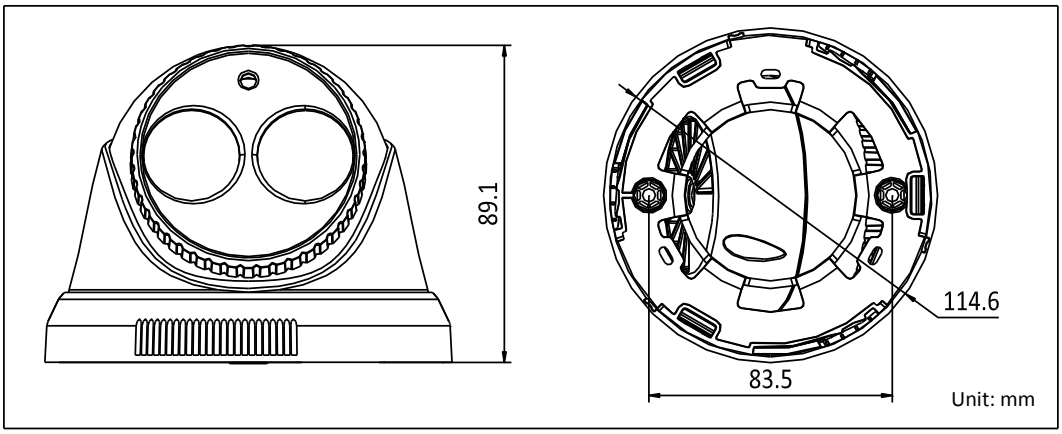
Dimensions (unit : mm)